A heavy duty

RAL 3002 5012 7040

GALVANIZED AND POWDER COATED STRUCTURE / STRUTTURA ZINCATA E VERNICIATA

ø 410 mm
drum/*tamburo*

optional page 80-83

INLET HOSE **ACS15** **ASG15R** **P38AV**

II 2G/D
optional

ordering the version indicating the hose reel code preceded by "EX"/
ordinare la versione indicando il codice dell'avvolgitubo preceduto da "EX"

4R - Optional 4-rollers hose guide. Ordering the version indicating the hose reel code followed by "4R"
4R *- Guida tubo a 4 rulli opzionale. Ordinare la versione indicando il codice dell'avvolgitubo seguito da "4R"*

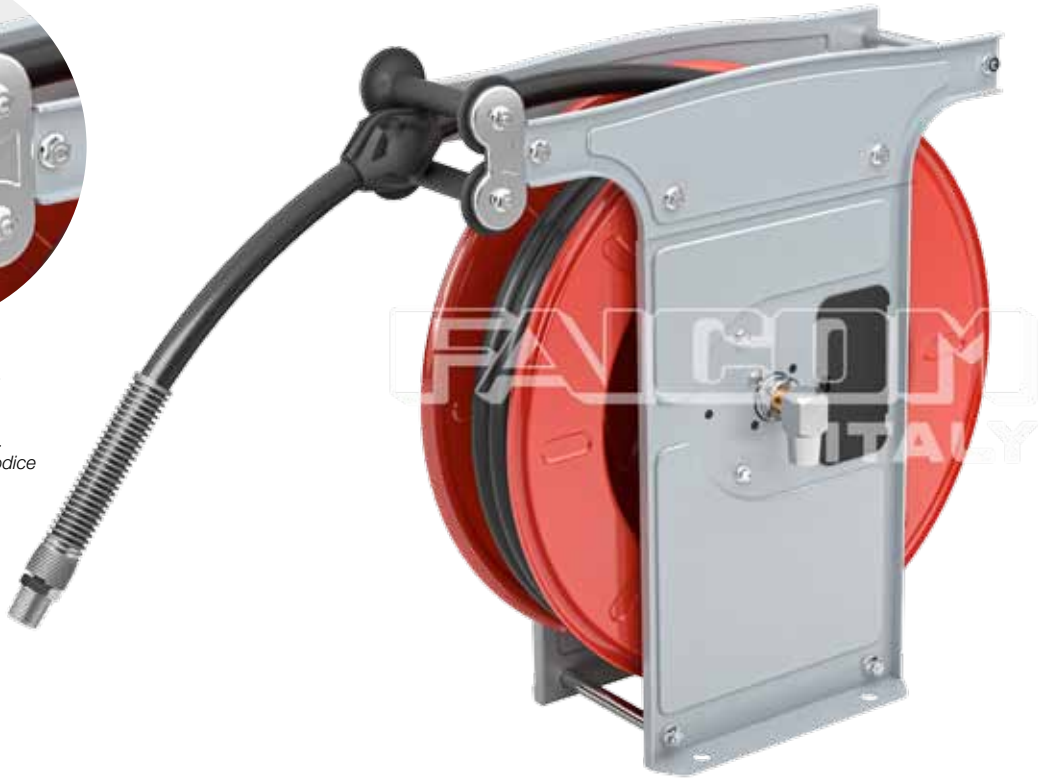

EN Automatic hose reels suitable for the distribution of fluids at different pressure and temperature conditions. The parts in contact with the fluid have metal details and high-quality gaskets. The hose-guide support can be mounted in two different positions according to the hose reel installation (pos. A-B). Optional: connection hose, revolving stand, 4-rollers hose-guide, fixing bracket.

FR Enrouleurs automatiques utilisés pour distribuer des fluides à différentes pressions et températures. Composants en contact avec le fluide constitués de pièces métalliques et de joints de haute qualité. Support guide-tuyau applicable en 2 positions différentes pour permettre l'installation souhaitée (pos. A-B). En option: tuyau de connexion, support pivotant, guide tuyau 4 rouleaux, contre-étrier de fixation.

DE Schlauchaufroller zur Abgabe von versch. Flüssigkeiten untersch. Betriebstemperaturen und -drücke. Teile mit Kontakt von Flüssigkeiten aus spez. Metallen und Dichtungen hoher Qualität. Wandbefestigung für 2 versch. Positionen (s.Abb. A-B). Optional: Verbindungsschlauch, Schwenkkonsole, Schlauchführung mit 4 Rollen und Wandbefestigung.

ES Enrolladores automáticos preparados para distribuir fluidos con diversas condiciones de presión y temperatura. Componentes en contacto con el fluido constituidos por partes metálicas y guarniciones de alta calidad. Soporte guía manguera aplicable en dos diversas posiciones para permitir la instalación deseada (pos. A-B). Opcional: manguera de conexión, soporte giratorio, guía de manguera de 4 rodillos, sujeción para fijación.

IT Avvolgitubo automatici adatti per distribuire fluidi a diverse pressioni e temperature. Parti a contatto con il fluido costituite da particolari metallici e guarnizioni di elevata qualità. Supporto guidatubo applicabile in due diverse posizioni per consentire l'installazione desiderata (pos. A-B). Optional: tubo di collegamento, supporto girevole, guidatubo a 4 rulli, controstaffa di fissaggio.

Dimensions (mm) / *Dimensioni (mm)*

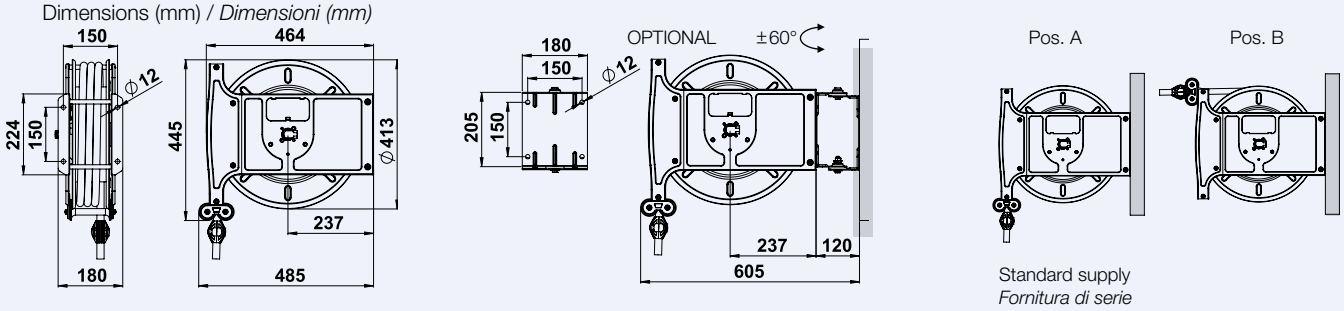

Hose reels model A without hose / *Avvolgitubo modello A senza tubo*

Fluid *Fluido*	Max. pressure *Pressione max.*	Code *Codice*	Inlet (Bsp) *Entrata (Gas)*	Outlet (Bsp) *Uscita (Gas)*	Capacity *Capacità*	Weight (kg) *Peso (kg)*	ATEX *(optional)*
Air/Aria Water/Acqua Oil/Olio	60 bar/870 psi	**A603815ST**	3/8" F	3/8" M	15 m/50 ft	15,5	•
		A601215ST	1/2" M	1/2" M	15 m/50 ft	15,5	•
Air/Aria Water/Acqua	18 bar/260 psi	**A183820ST**	3/8" F	3/8" M	(ext. Ø17) 20 m/65ft	15,5	•
Air/Aria	18 bar/260 psi	**A183825ST**	3/8" F	3/8" M	(ext. Ø14) 25 m/80ft	15,5	•
Grease/Grasso	400 bar/5800 psi	**A4G1415ST**	1/4" F	1/4" M	15 m/50 ft	15,5	•
Water/Acqua 150°C	400 bar/5800 psi	**A4H3815ST**	3/8" F	3/8" M	15 m/50 ft	15,5	•
		***A4H3815STMX**	3/8" F	3/8" M	15 m/50 ft	15,5	•

* With stainless steel swivel and shaft / *Con giunto e mozzo in acciaio inox*

Hose reels model A with hose / *Avvolgitubo modello A completi di tubo*

Fluid *Fluido*	Pressure - Hose *Pressione - Tubo*	Code *Codice*	Inlet (Bsp) *Entrata (Gas)*	Outlet (Bsp) *Uscita (Gas)*	Hose diam. *Tubo diam.*	Hose length *Lungh. Tubo*	Weight (kg) *Peso (kg)*	Inlet hose *Tubo entrata*	ATEX *(optional)*
Oil/Olio	60 bar/870 psi 1SC Rubber/Gomma	**A603810**	3/8" F	3/8" M	3/8"	10 m/32 ft	19	TC38005	
		A603815	3/8" F	3/8" M	3/8"	15 m/50 ft	20	TC38005	•
		A601210	1/2" M	1/2" M	1/2"	10 m/32 ft	19	TC12005	
		A601215	1/2" M	1/2" M	1/2"	15 m/50 ft	21	TC12005	•
Grease Grasso	400 bar/5800 psi 2SN Rubber/Gomma	**A4G1410**	1/4" F	1/4" M	1/4"	10 m/32 ft	19	TC14005	
		A4G1415	1/4" F	1/4" M	1/4"	15 m/50 ft	21	TC14005	•
Water Acqua 150°C	250 bar/3625 psi 1SC Hydro blue	**A2H3815**	3/8" F	3/8" M	3/8"	15 m/50 ft	21	TC38005H	
	400 bar/5800 psi 2SC Hydro blue	**A4H3810**	3/8" F	3/8" M	3/8"	10 m/32 ft	20	TC38005H	
		A4H3815	3/8" F	3/8" M	3/8"	15 m/50 ft	22	TC38005H	•
		A4H5115	3/8" F	3/8" M	5/16"	15 m/50 ft	21	TC38005H	•